ALPHA MICROSYSTEMS
RIGHT. FROM THE START

AM-366 / 367 / 368

Ethernet Controller and Adapter Boards Installation Instructions

PDI-00366-00,Rev.A04

© 1995 Alpha Microsystems

REVISIONS INCORPORATED	
REVISION	DATE
00	June 1990
01	Sept. 1992
02	Oct. 1992
03	Feb. 1994
04	Sept. 1994

AM-366/367/368 Ethernet Controller and Adapter Installation Instructions
To re-order this document, request part number PDI-00366-00.

The information contained in this manual is believed to be accurate and reliable. However, no responsibility for the accuracy, completeness or use of this information is assumed by Alpha Microsystems.

This document may contain references to products covered under U.S. Patent Number 4,530,048.

The following are registered trademarks of Alpha Microsystems, Santa Ana, CA 92799:

AMIGOS	AMOS	Alpha Micro	AlphaACCOUNTING
AlphaBASIC	AlphaCALC	AlphaCOBOL	AlphaFORTRAN 77
AlphaLAN	AlphaLEDGER	AlphaMAIL	AlphaMATE
AlphaNET	AlphaPASCAL	AlphaRJE	AlphaWRITE
CASELODE	OmniBASIC	VER-A-TEL	VIDEOTRAX

The following are trademarks of Alpha Microsystems, Santa Ana, CA 92799:

AlphaBASIC PLUS	AlphaVUE	AM-PC	AMTEC
DART	ESP	MULTI	inSight/am
inFront/am			

All other copyrights and trademarks are the property of their respective holders.

ALPHA MICROSYSTEMS
2722 S. Fairview Street
P.O. Box 25059
Santa Ana, CA 92799

TABLE OF CONTENTS

1.0 INTRODUCTION 1

2.0 GENERAL PRODUCT DESCRIPTION 1

3.0 GENERAL PRODUCT SPECIFICATIONS 1
3.1 Media Specifications 2

4.0 SOFTWARE SPECIFICATIONS 2

5.0 CONFIGURING THE AM-366 BOARD 3

6.0 INSTALLATION INSTRUCTIONS 3

7.0 INSTALLATION (AM-1600 DESKTOP MODEL) 4
7.1 Installing the AM-366 in the AM-135 Board 4
7.2 Installing the 15-pin Cable 6
7.3 Installing the AM-367 Thin Ethernet Adapter 7

8.0 INSTALLATION (EAGLE AND AM-1600 DESKSIDE COMPUTERS) 9
8.1 Installing the AM-366 Board 9
8.2 Installing the 15-pin Cable (Standard Ethernet) 16
8.3 Installing the AM-367 Adapter Board 18

9.0 EXTERNAL CABLING 19
9.1 Ethernet Cabling 20
9.2 Thin Ethernet Cabling 21

10.0 INSTALLING THE AM-368 10BASET ADAPTER 23
10.1 10BaseT Topology and Cabling 24
10.2 Jumper settings 25
10.3 AM-368 Status LEDs 26

11.0 ETHERNET SOFTWARE CONFIGURATION 26
11.1 Overview of the Software Installation 27
11.2 Creating a Network Initialization File for Ethernet 27
11.3 Setting Up Ersatz Names 28

12.0 ADDITIONAL DOCUMENTATION 28

1.0 INTRODUCTION

This document gives hardware and software instructions for installing the AM-366 Ethernet controller board into Alpha Micro's AM-1600 desktop and deskside computers, as well as Eagle 100 and 200 computers. We will discuss the following topics:

- General product information
- Step-by-step hardware installation, including the installation of optional AM-367 (Thin Ethernet) and AM-368 (10BaseT) adapters.
- Software installation and modification procedures

2.0 GENERAL PRODUCT DESCRIPTION

The AM-366 paddle card is a medium performance Ethernet controller designed for use in Alpha Micro's AM-1600 and Eagle 100 and 200 computers. You may add one AM-366 board per computer. The AM-366 board plugs into a connector located on your computer's main logic board.

There are three different AM-366 product kits available:

- PDB-00366-00 — the standard AM-366 board and mounting kit; this kit does not support Thin Ethernet or 10BaseT.
- PDB-00367-00 — the AM-367 Ethernet Adapter Kit allows the use of Thin Ethernet.
- PDB-00368-00 — the AM-368 Ethernet Adapter Kit allows the use of 10BaseT (twisted pair) Ethernet.

3.0 GENERAL PRODUCT SPECIFICATIONS

- Standard Ethernet, Thin Ethernet, and 10BaseT (twisted Pair) are supported.
- 10Mbits/s media transfer rate
- Unique Ethernet address in PROM
- 32K buffer RAM
- Burst local/remote DMA to prevent packet loss

3.1 Media Specifications

Parameter	Ethernet	Thin Ethernet	10BaseT
Data rate	10Mbit/s	10Mbit/s	10Mbit/s
Segment Length	500m	185m	100m
Network span	2500m	925m	N/A
Nodes per segment	100	30	2
Node spacing	2.5m (cable marked)	0.5m minimum	N/A
Cable	.4 inch diameter 50 Ohm Double shielded Rugged N-series connectors	.2 inch diameter 50 Ohm (RG58A/U) Single shielded Flexible BNC Connectors	24 Gauge (0.5mm) wire Twisted-Pair, 100 Ohm Unshielded, different pairs to transmit and receive

4.0 SOFTWARE SPECIFICATIONS

In order to use your AM-366 board, the following items must be in place on all computers connected to your network:

1. All computers connected to your network must have AlphaNET 2.1 B (or later) downloaded as described in the *AlphaNET Installation Guide*, DSO-00063-00.

2. Your Eagle computer must be running an AMOS operating system no earlier than PR8/94 AMOS 1.4C or PR8/94 AMOS 2.2C. Your AM-1600 computer must be running an AMOS operating system no earlier than AMOS/L 1.3E or AMOS/L 2.1B.

   Also, the Ethernet driver for Eagle 100 and 200 computers, AM366B.NDV, is not included in the PR/8 94 AMOS releases. It will be distributed on a Product Support Kit tape and it will also be available on AMTEC+.

5.0 CONFIGURING THE AM-366 BOARD

There are no user configurable jumpers on the AM-366 board. In fact, the only jumper on the board is the W1 jumper, which should never be removed. There are also no termination or addressing concerns. The board is automatically addressed when it is plugged into the appropriate connector on the AM-135 board. The AM-366 board is shown below.

In order to function on Eagle 100 and 200 computers, the AM-366 board must be at revision A07 or later.

AM-366 ETHERNET CONTROLLER BOARD

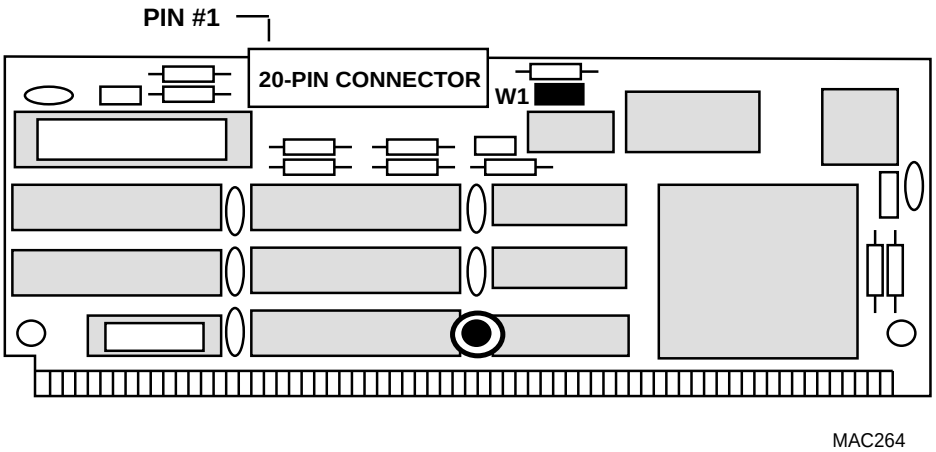

AM-366 Ethernet Controller Board

6.0 INSTALLATION INSTRUCTIONS

The following sections describe how to install the AM-366 Ethernet board and adapters into AM-1600 (both desktop and deskside) and Eagle computers. Because the Eagle and AM-1600 deskside computers are very similar, their installation instructions are covered in the same section. The AM-1600 desktop computer is covered in a separate section.

7.0 INSTALLATION (AM-1600 DESKTOP MODEL)

The installation instructions in this section apply to desktop AM-1600 computers only. Instructions for the deskside AM-1600 appear further on in this document.

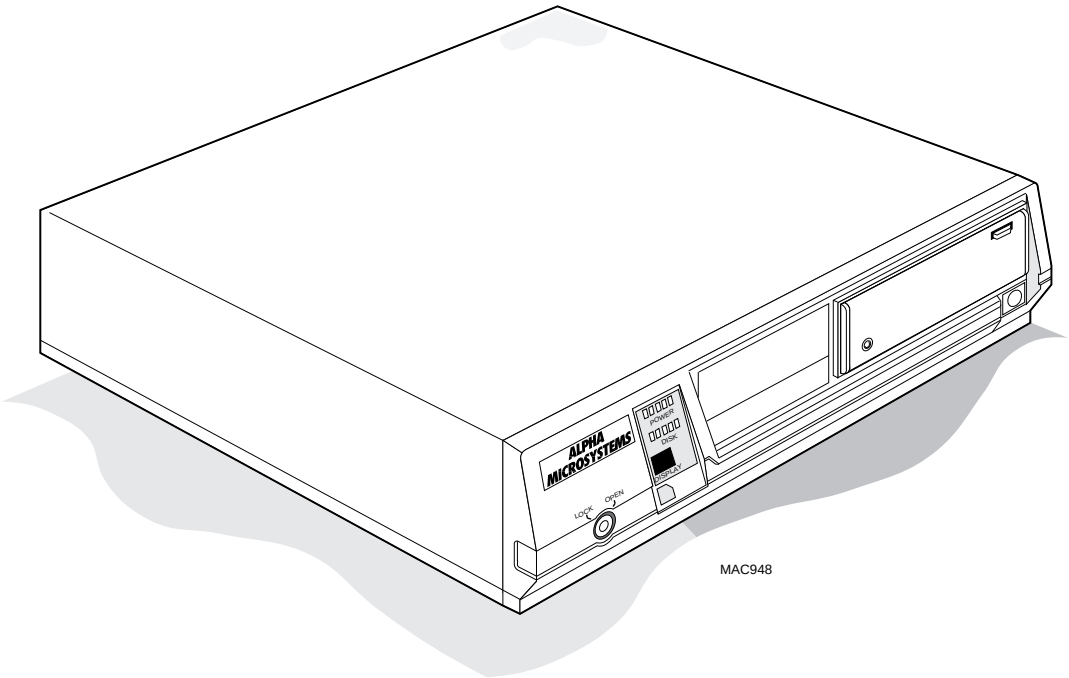

AM-1600 Desktop Computer

7.1 Installing the AM-366 in the AM-135 Board

The first step in the installation process is to remove the computer's top cover. The AM-1600 top cover is held in place with four phillips-head screws. Remove the four screws and set the top cover in a safe place where it won't get damaged.

The AM-366 board installs in connector J14 on the AM-135 board. If you have an AM-314 four port serial I/O board installed in the J14 connector, the I/O board must be removed in order to install the AM-366 board.

The AM-135 board illustration on the following page shows the location of the J14 connector. Gently press the AM-366 board into position. The component side of the AM-366 board must face the rear panel of the computer.

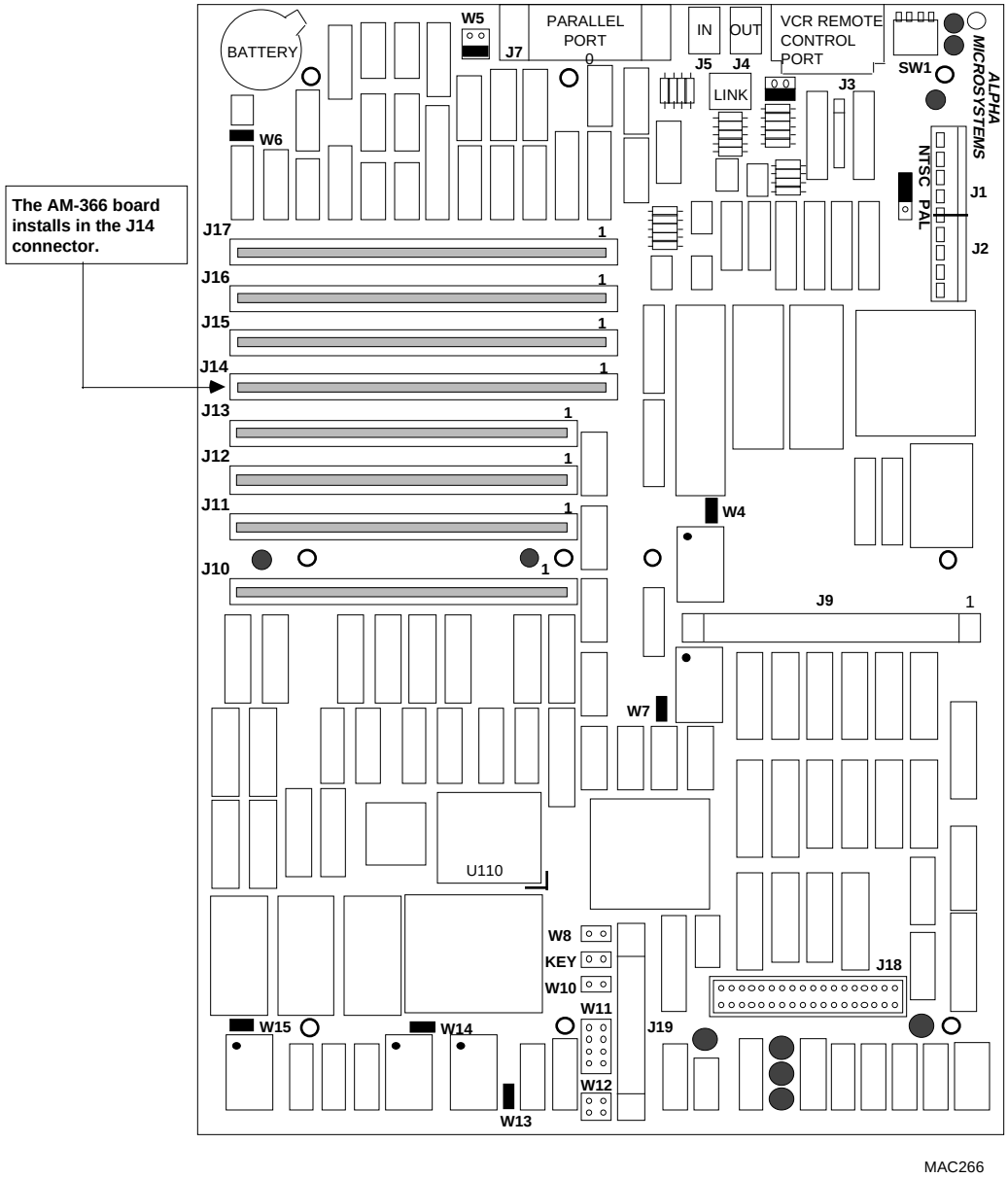
The AM-366 board installs in the J14 connector.
BATTERY
W5
J7
PARALLEL PORT
IN
OUT
VCR REMOTE CONTROL PORT
J5
J4
LINK
J3
SW1
ALPHA MICROSYSTEMS
W6
NTSC PAL
J1
J2
J17
J16
J15
J14
J13
J12
J11
J10
W4
J9
W7
U110
W8
KEY
W10
W11
W12
W13
W14
W15
J19
J18
MAC266

AM-135 Board

7.2 Installing the 15-pin Cable

Your installation kit includes one 15-pin cable; the cable has a standard 15-pin connector at one end and a female DB15 connector at the opposite end. Plug the end of the cable with the standard 15-pin connector into the AM-366 board. The connector on the AM-366 board has an embossed arrow showing the pin-1 location. Also, the AM-366 board illustration (shown earlier in this document) shows the location of pin-1. Make sure the red stripe on the cable aligns with pin-1 on the connector. The opposite end of the cable with the DB15 connector must be connected to the rear panel. There is a cutout on the rear panel of your AM-1600 designed for a DB15 connector. The cutout is shown in the illustration on the following page.

To attach the 15-pin connector to the rear panel, use the following instructions:

1. The DB15 connector is secured to the rear panel using the slide-lock assembly as shown in the illustration.

2. Place the DB15 connector inside the rear panel. Insert the screws from outside of the chassis. On the inside of the chassis place one flat washer, one lock washer, and one nut on the end of each screw. Only tighten the screws a few turns. Slip the slide-lock over the screw heads on the outside of the chassis.

3. Now, tighten the screws so the assembly is firmly attached to the rear panel.

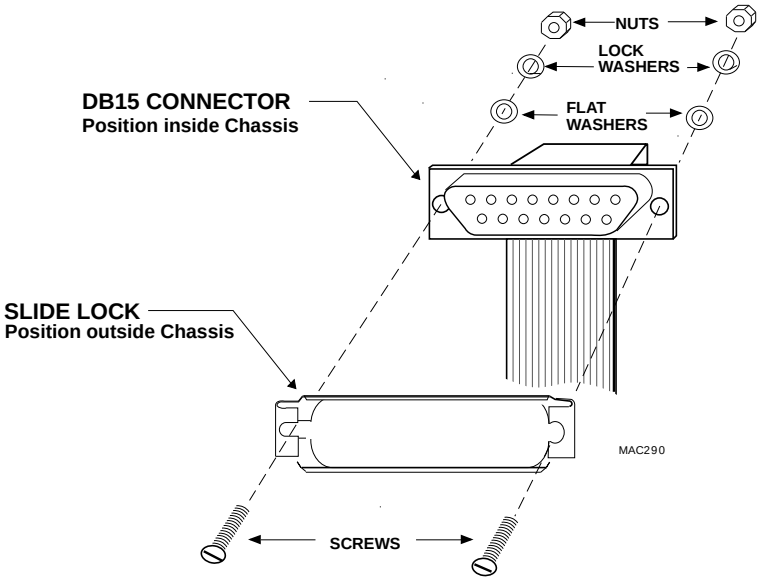

15-Pin Connector Assembly (Standard Ethernet only)

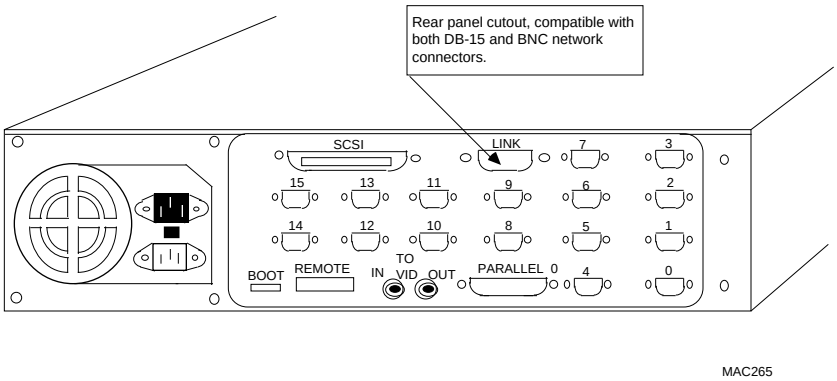

AM-1600 Rear Panel

(Note, there are several different types of rear panels, yours might be different from that shown above.)

7.3 Installing the AM-367 Thin Ethernet Adapter

The AM-367 (used for converting Standard Ethernet protocol to Thin Ethernet) is included in the PDB-00367-00 product kit.

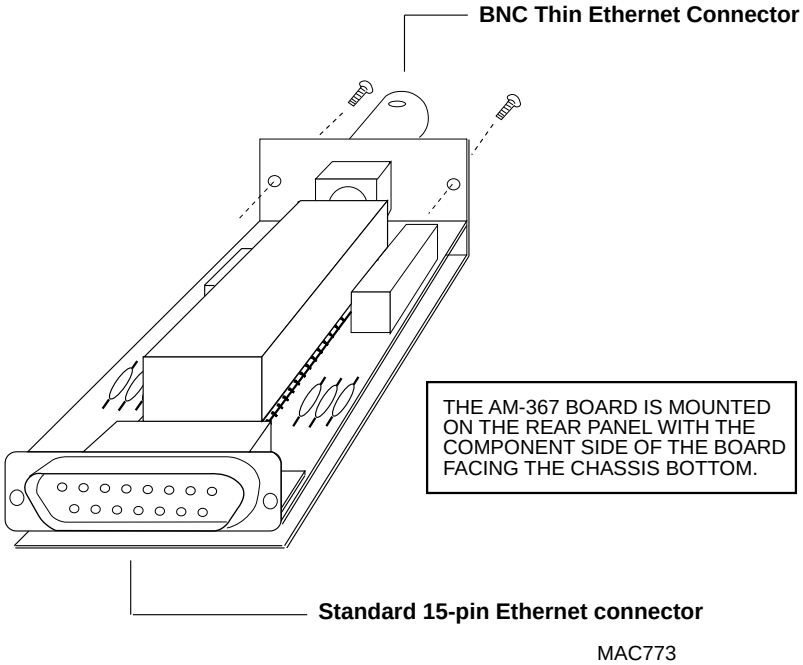

AM-367 Thin Ethernet Adapter

The installation is as follows:

1. The AM-367 is attached to the inside of the AM-1600 rear panel using the same DB15 connector cutout shown in the illustration.

2. The AM-367 has a DB15 connector at one end and a BNC connector at the other. To install the AM-367, insert the end of the board with the BNC connector through the DB15 cutout on the rear panel. Be sure the flat side of the BNC connector is down and horizontal. Use caution, it is a very tight fit. Make sure the component side of the board is facing down. Secure the AM-367 to the rear panel with two #4 screws included in the installation kit.

3. Next, you must install the 15-pin cable that extends between the AM-366 and AM367 boards. Plug the 15-pin DB15 connector into the socket on the AM-367. The other end of the cable (the end with the standard 15-pin connector) plugs into the AM-366 board. Make sure the red stripe on the cable aligns with pin-1 on the AM-366 board's 15-pin connector.

Some LC computer rear panels have the link connector cutout positioned close to the chassis bottom. Care must be exercised when installing the AM-367 adapter board. Before installing the AM-367, unlatch the AM-314 I/O board nearest the I/O panel. Do not remove the I/O board, simply lean it toward the front panel. Attach the AM-367 to the rear panel and then carefully latch the AM-314 board back into its upright position. You may have to lift the AM-367 up slightly to clear the components on the AM-314 board. On newer computers, the cutout that supports the AM-367 has been repositioned for more clearance.

8.0 INSTALLATION (EAGLE AND AM-1600 DESKSIDE COMPUTERS)

The installation instructions in this section apply to Eagle and AM-1600 deskside computers only.

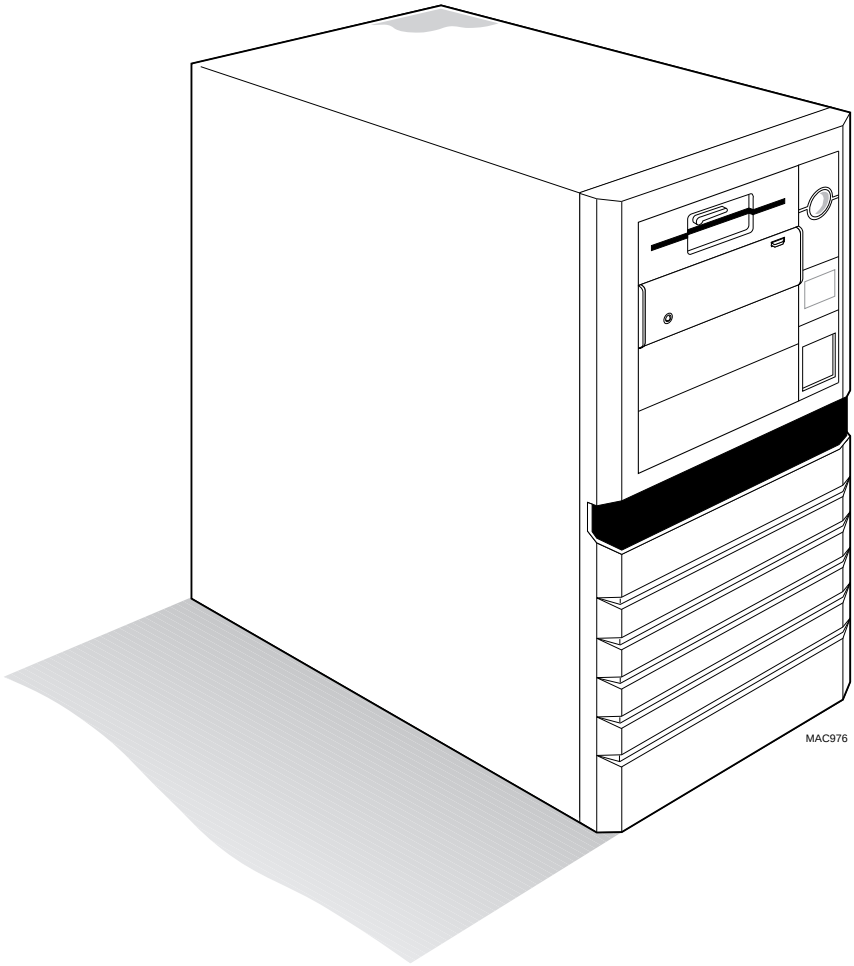

Eagle and AM-1600 Deskside Computer Enclosure

8.1 Installing the AM-366 Board

The first step in the installation process is to remove the computer's top cover. The top cover is held in place with four phillips-head screws. Remove the four screws as shown in the illustration and the top cover can be slid back and removed.

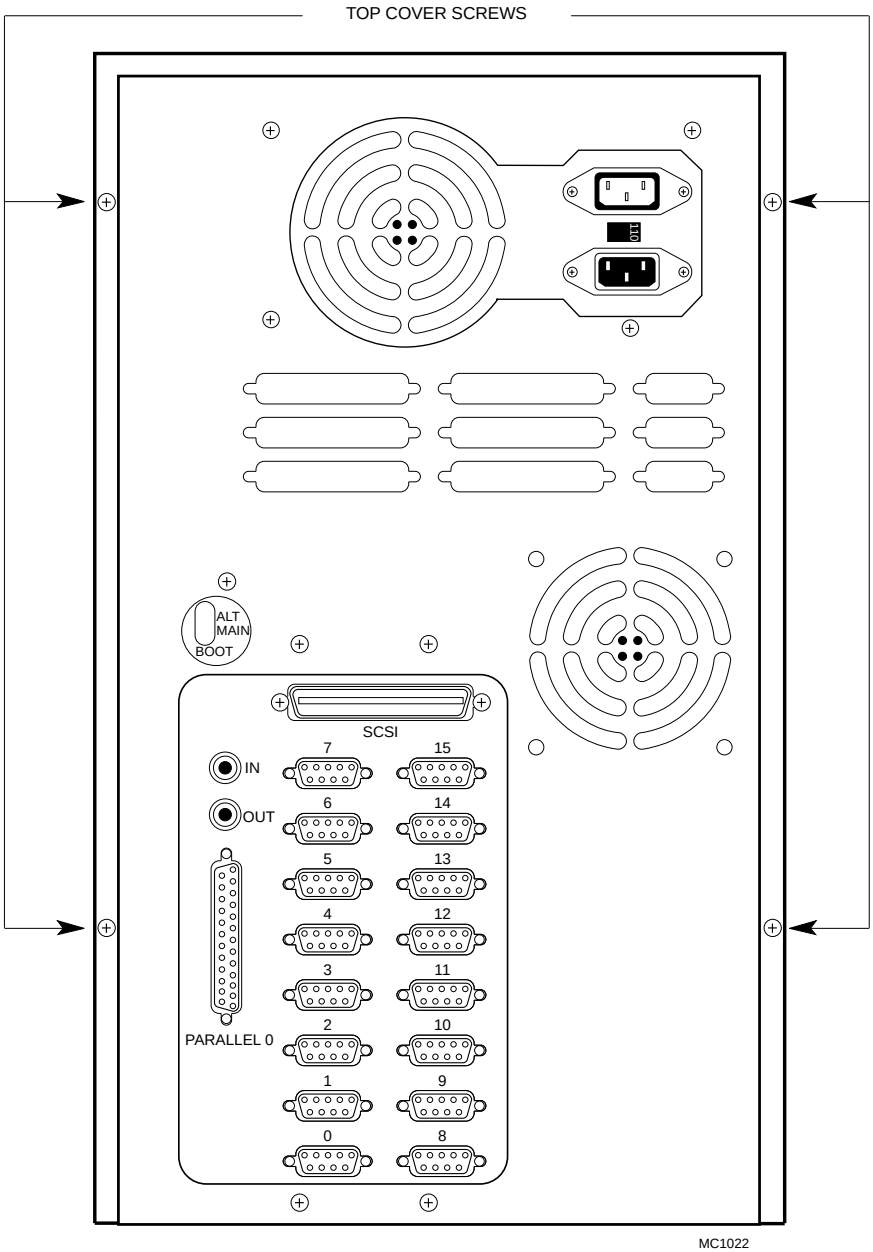

Top Cover Screws

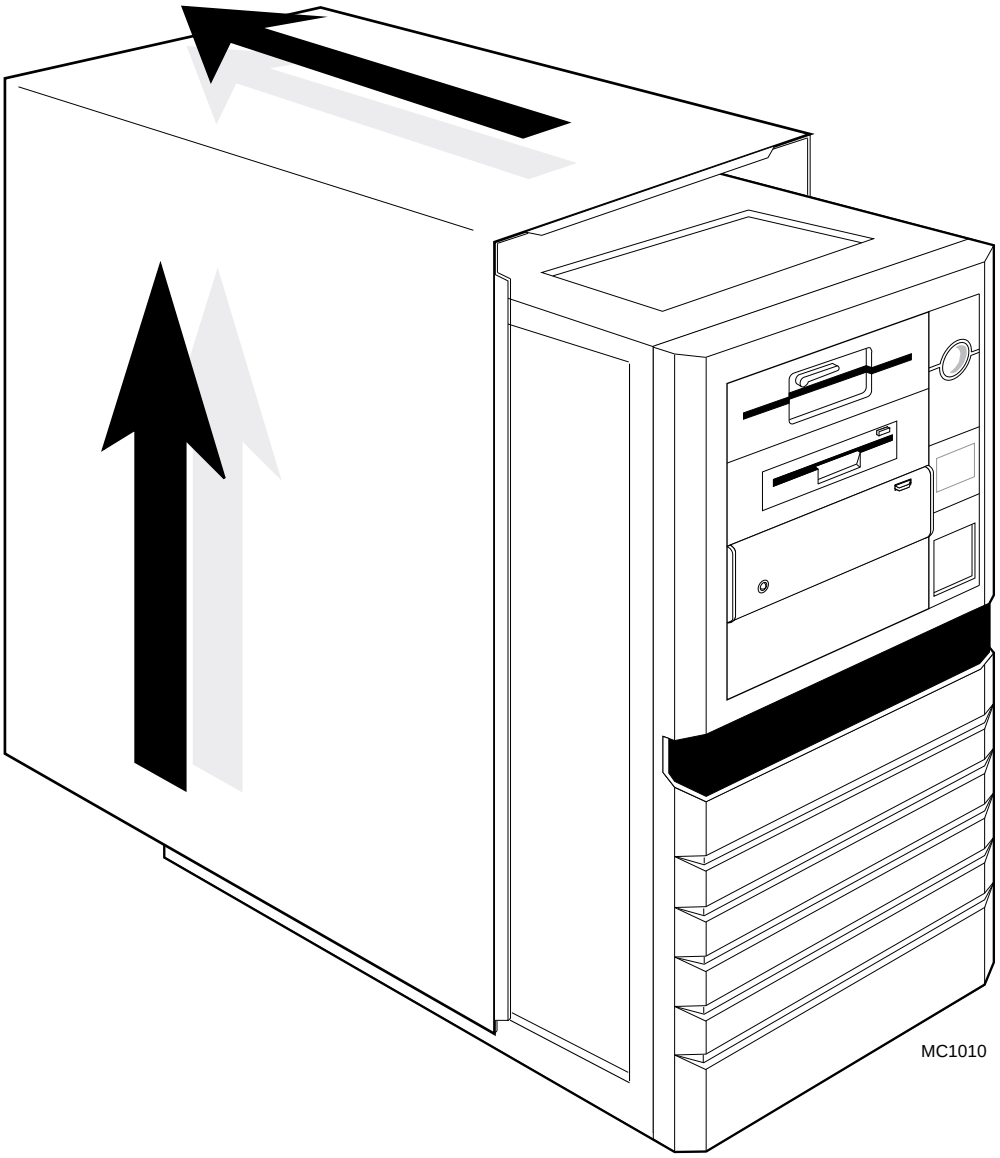

Top Cover Removal

On the next three pages there are illustrations of the AM-135 board used in AM-1600 deskside computers; the AM-319(-10) board used in Eagle 200 computers; and the AM-137 board used in Eagle 100 computers. Each board illustration shows the connector where the AM-366 board must be installed:

- On the AM-135 board, the connector designed for the AM-366 board is J14.
- On the AM-137 board, the connector designed for the AM-366 board is J6.
- On the AM-319(-10) board, the connector designed for the AM-366 board is J7.

The AM-366 Ethernet board must be inserted into the connector with the component side of the AM-366 board facing the computer's rear panel. The AM-366 will slide into the connector at a slight angle; once the board is properly seated into the connector, you must rotate it into the upright position. Small metal locking-tabs at each end of the connector will secure the AM-366 in place.

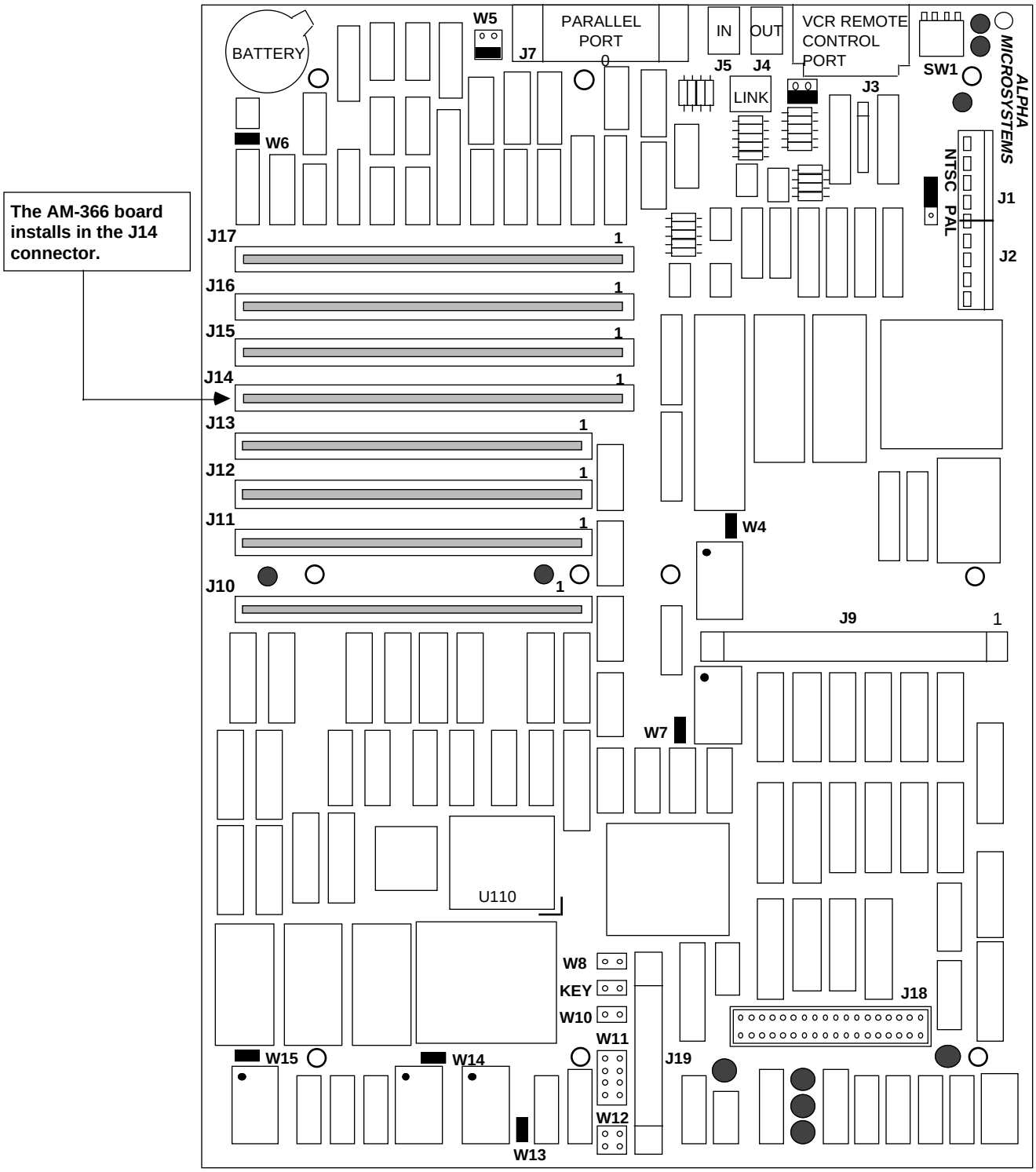
The AM-366 board installs in the J14 connector.
BATTERY
W5
J7
PARALLEL PORT
IN
OUT
VCR REMOTE CONTROL PORT
J5
J4
LINK
J3
SW1
ALPHA MICROSYSTEMS
W6
NTSC
PAL
J1
J2
J17
J16
J15
J14
J13
J12
J11
J10
W4
J9
W7
U110
W8
KEY
W10
W11
W12
J18
J19
W15
W14
W13
MAC266

AM-135 Board

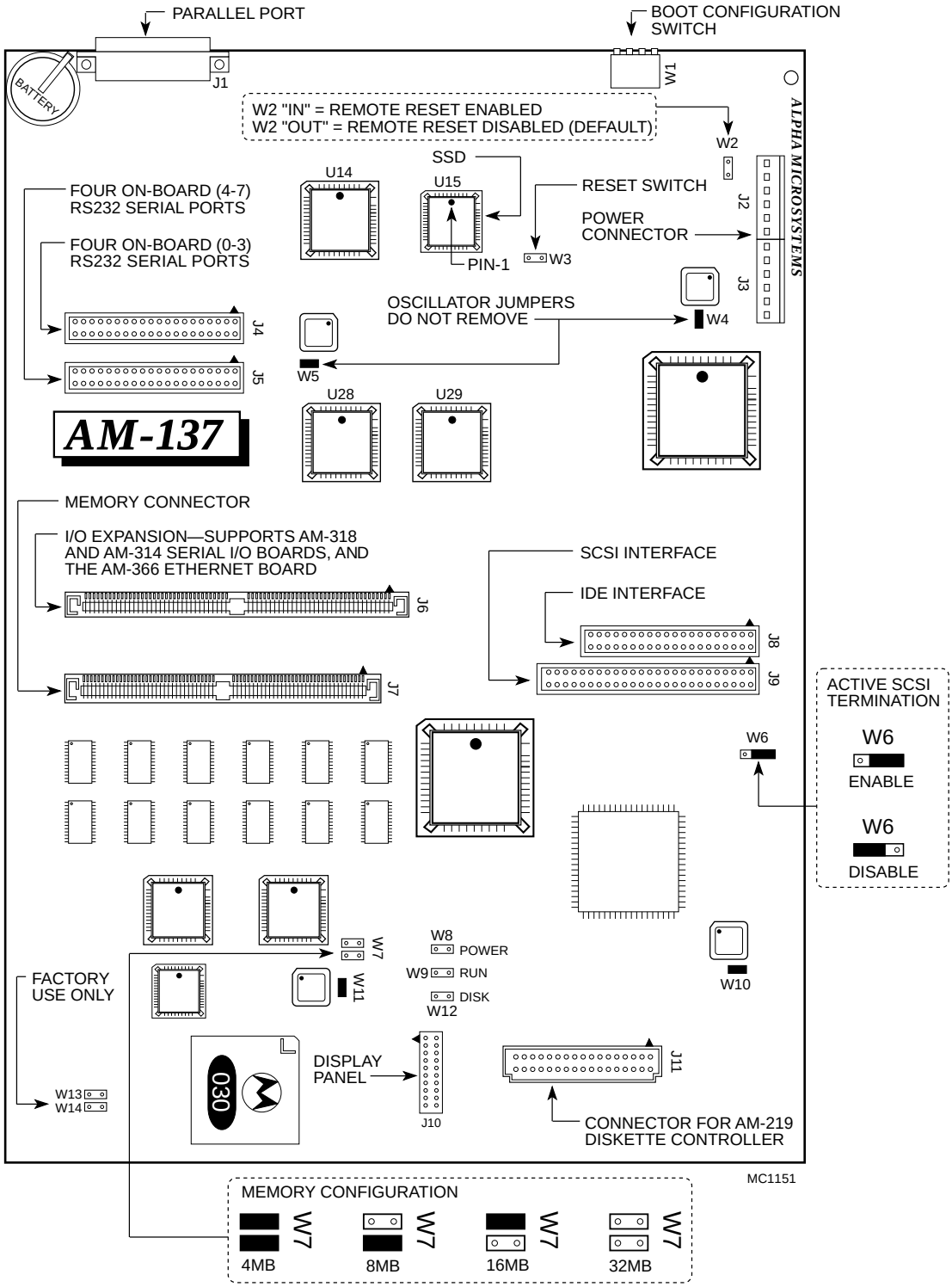

AM-137 Board Configuration

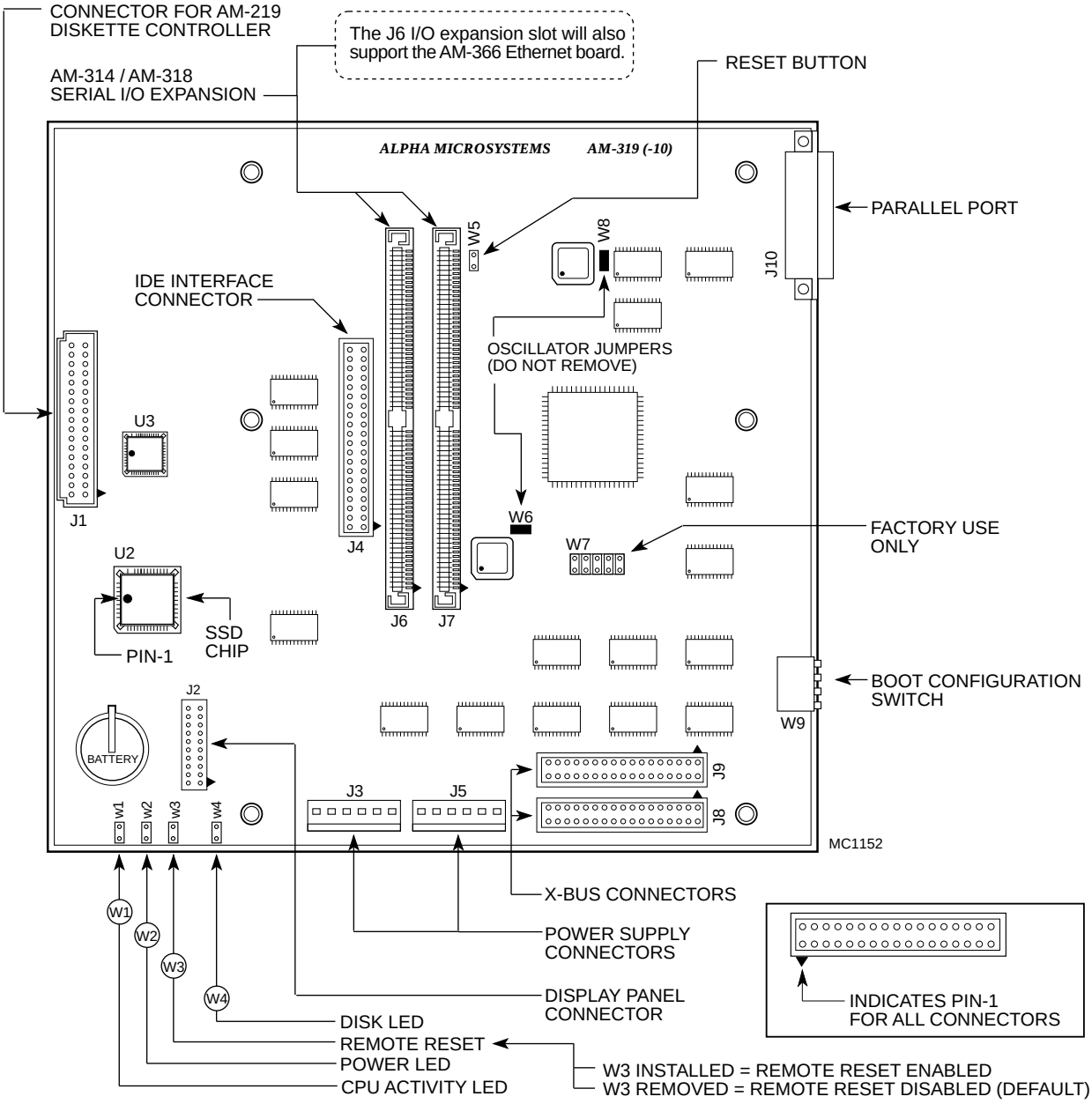

AM-319(-10) Board Configuration

8.2 Installing the 15-pin Cable (Standard Ethernet)

If you will be using standard (thick) Ethernet cabling, you will need to construct the cable assembly shown in the following illustration. The assembly includes a 15-pin cable assembly, one adapter bracket (DWF-20519-03), one slide-lock bracket, two 4-40 screws, two lock washers, and two nuts. You must build this assembly first, and once assembled, it will be installed on your computer's rear panel.

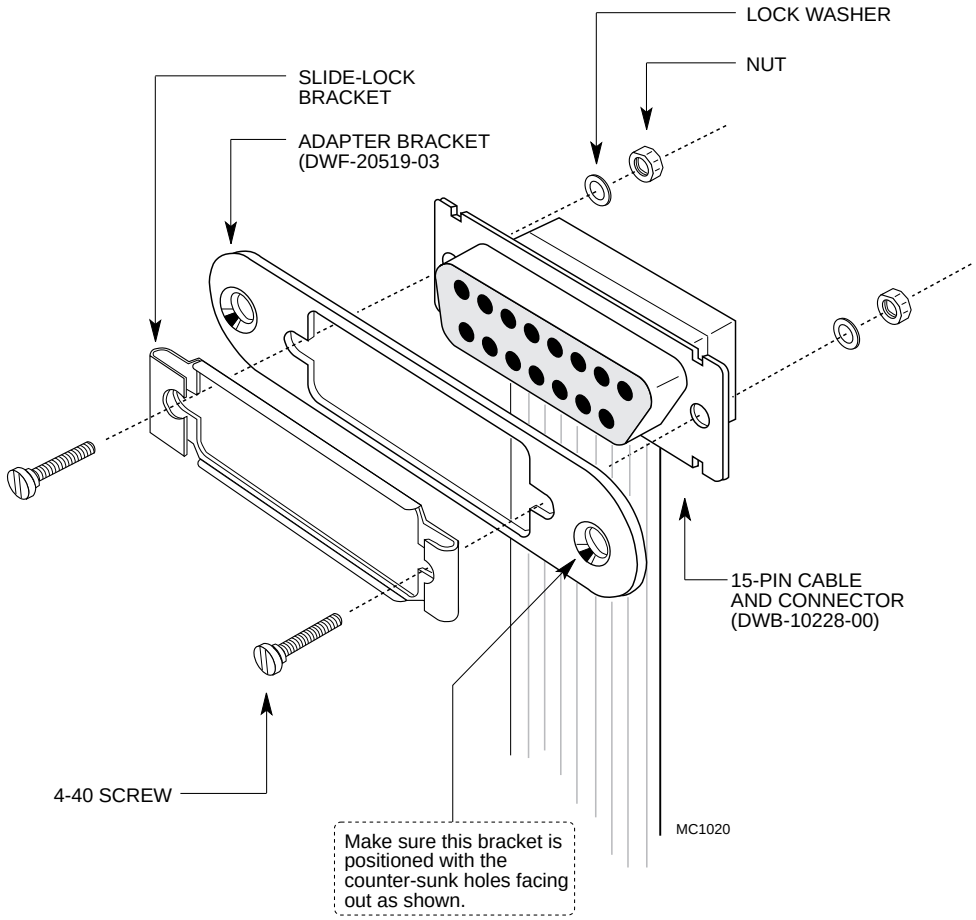

Standard Ethernet 15-pin Cable Assembly

You do not need to build the above assembly if you will be installing the AM-367 Thin Ethernet adapter.

The cable assembly installs in one of the 25-pin connector cutouts on your computer's rear panel. Before you can install the cable assembly, you must remove the knockout panel covering the cutout you plan to use. The knockout panel can be removed by pressing firmly with your finger. Be sure not to leave the knockout panel lying loose inside the chassis; it could damage your computer by causing a short circuit.

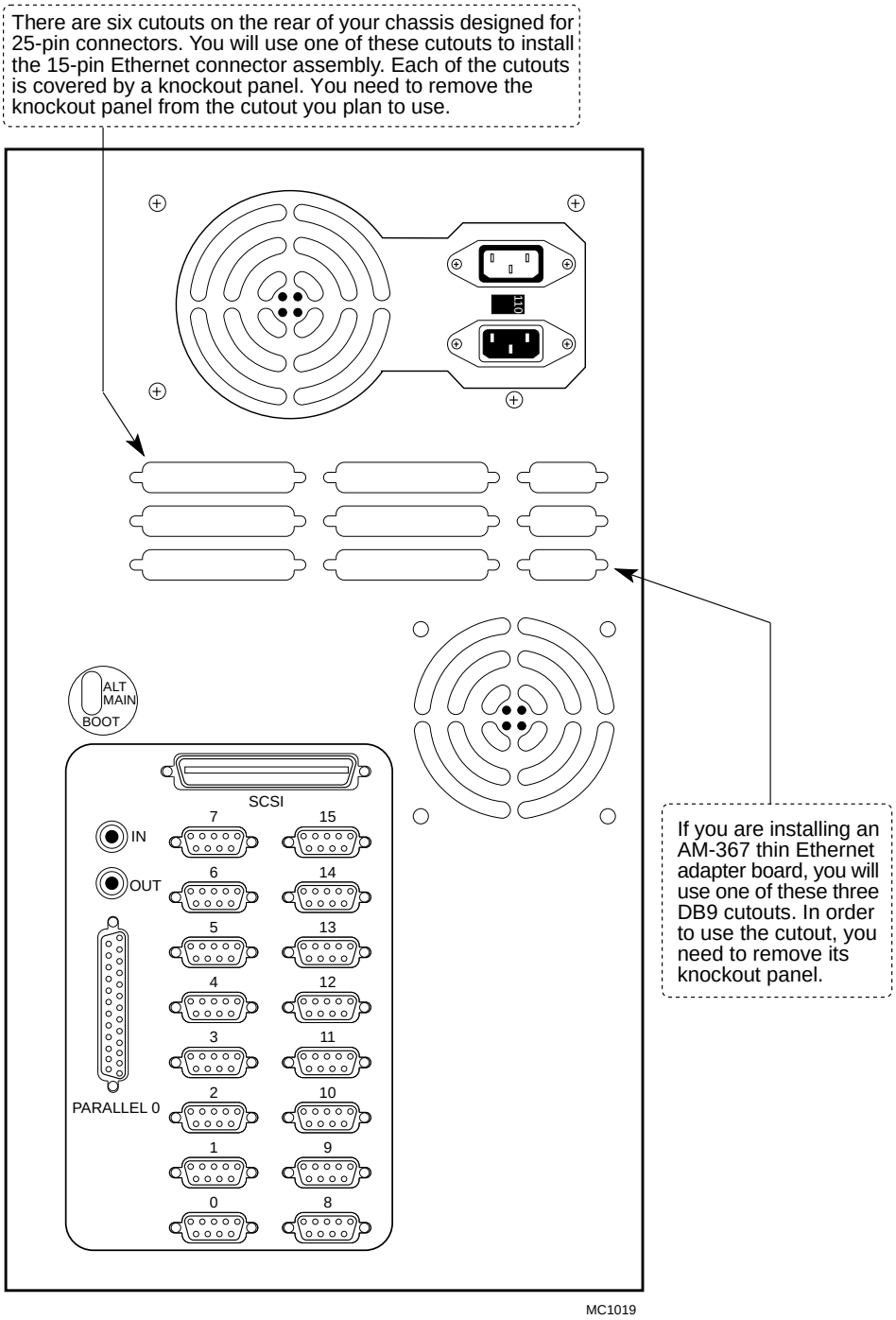

Deskside Cabinet Rear Panel

1. The cable assembly installs on the outside of the chassis. One end of the cable assembly has a standard 15-pin connector designed to plug into the AM-366 board.

2. Insert the standard 15-pin connector through the cutout in the rear panel. Pull the cable through to the inside of the chassis until the opposite end of the cable (the end with the slide-lock assembly) is up against the rear panel.

3. Two pan-head 4-40 screws hold the cable assembly in place. It is very important that you install two washers between the adapter plate on the cable assembly and the rear panel. Without the washers, the assembly will bend when you tighten the screws and the slide-lock will not work smoothly.

4. With the two pan-head screws and the two washers in place, you must then install one lock washer and one nut on each of the screws.

5. Once the cable assembly is installed on the rear panel, plug the opposite end of the cable into the AM-366 board, making sure that the red stripe on the cable aligns with pin-1 on the AM-366's 15 pin connector.

8.3 Installing the AM-367 Adapter Board

The AM-367 (used for converting Standard Ethernet protocol to Thin Ethernet) is included in the PDB-00367-00 product kit.

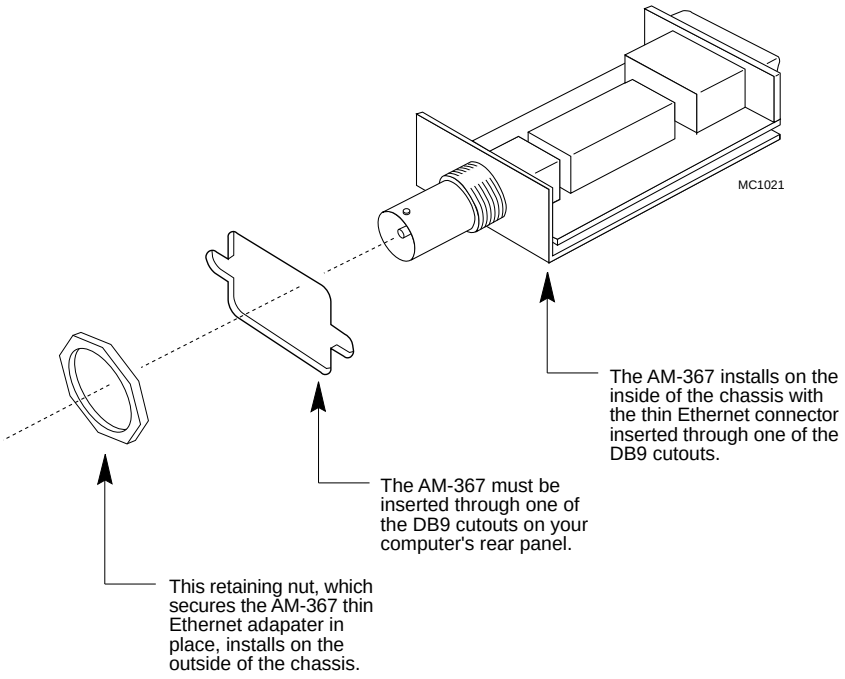

AM-367 Adapter Board

The installation is as follows:

1. The AM-367 is attached to the inside of the rear panel using one of three cutouts shown in the deskside rear panel illustration.

2. The AM-367 has a DB15 connector at one end and a BNC connector at the other. To install the AM-367, insert the end with the BNC connector through the cutout on the rear panel. The nylon threads on the BNC connector have two flat spots, which will allow the connector to slide through the cutout. The AM-367 should be positioned with its component side facing up toward the computer's top cover.

3. Secure the AM-367 to the rear panel using the retainer nut as shown in the illustration.

4. Once the AM-367 is installed, connect the 15-pin cable (included in your installation kit) between the AM-366 board and the 15-pin connector on the AM-367. Make sure the red stripe on the cable aligns with pin-1 on the AM-366 board.

9.0 EXTERNAL CABLING

Alpha Micro sells and supports the AM-366 Ethernet controller board, the AM-367 Thin Ethernet Adapter, and the AM-368 10BaseT adapter. The industry standard Ethernet hardware (external to the computers) shown in illustrations on the next three pages is not available from Alpha Micro, but it is readily available through a number of outlets.

9.1 Ethernet Cabling

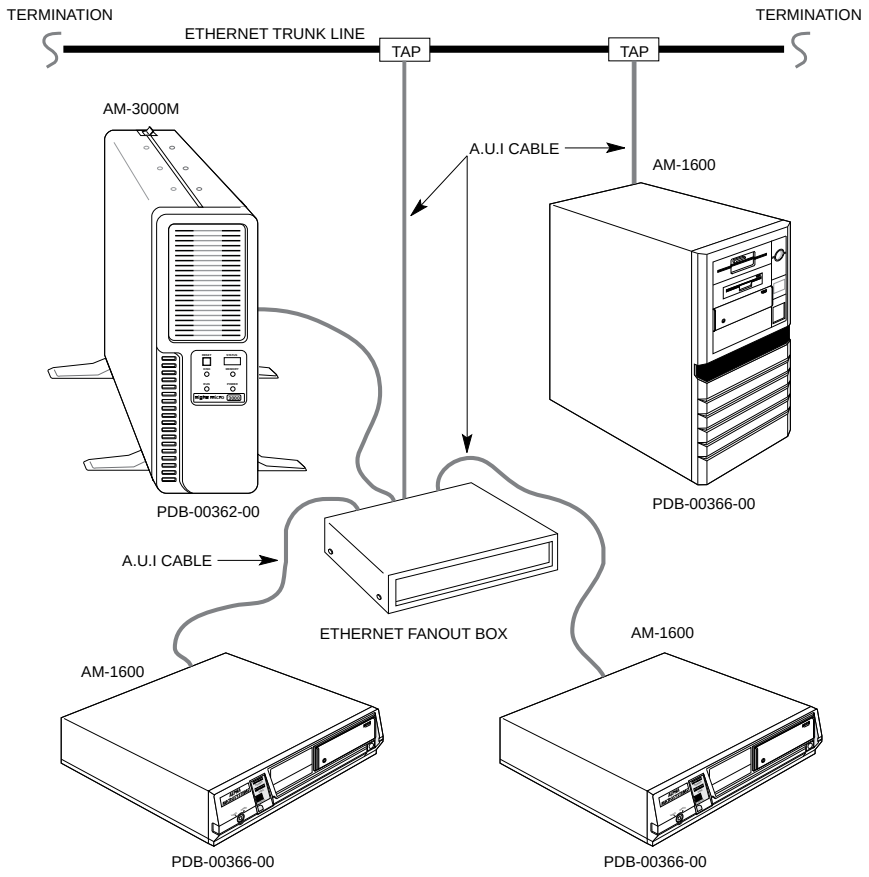

Standard Ethernet Cabling Example

The following information briefly describes the Ethernet equipment shown above:

1. Fanout — A fanout is a box containing multiple Ethernet ports. The fanout can either be tied into the main trunk line, or it can be used to create a local network not requiring a trunk line.

2. A.U.I. Cable — A.U.I. (Attachment Unit Interface) Cable is a 15-pin twisted pair cable that links the AM-366 board to either a fanout or the Ethernet trunk line. The DB15 connector attached to the rear panel is an industry standard 15-pin connector designed to support Ethernet A.U.I. cable.

3. Ethernet Trunk Line — A heavy duty coaxial type cable for Ethernet communications, maximum usable length approximately 1000 feet.

4. Transceiver (tap) — Taps are used to interconnect computers along the Ethernet Trunk Line.

9.2 Thin Ethernet Cabling

The same network configuration shown in the previous example can be put together using Thin Ethernet, as shown below:

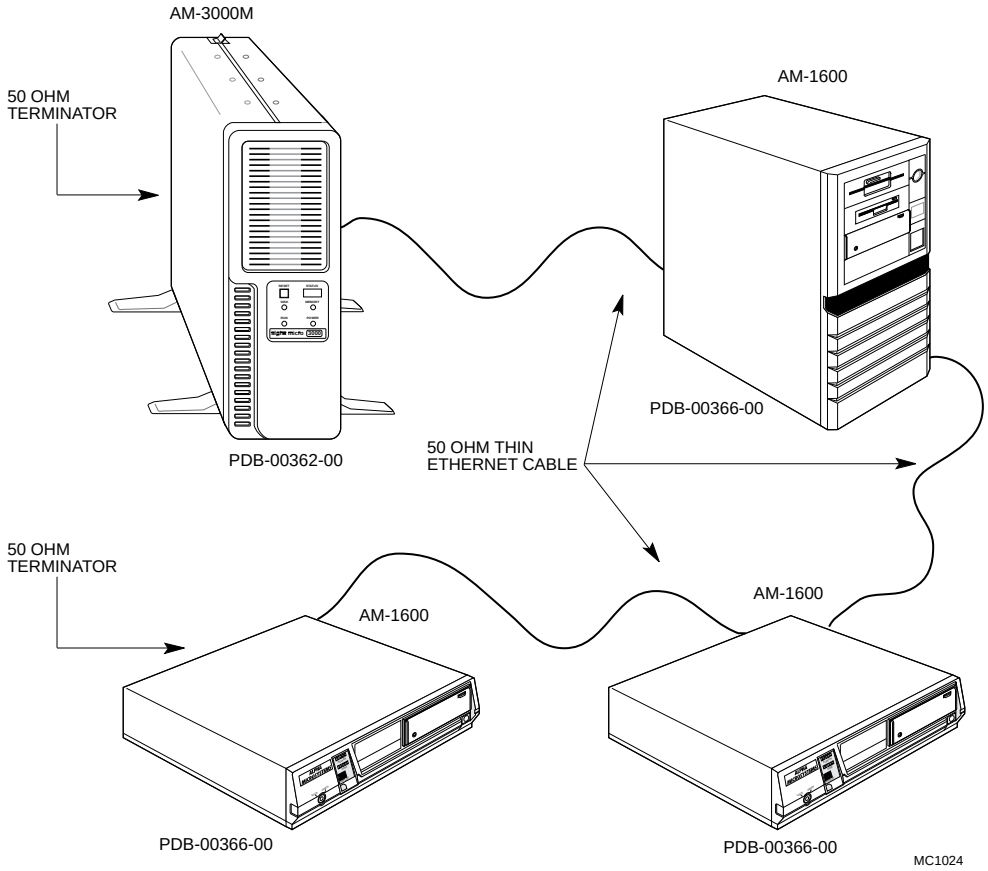

Thin Ethernet Cabling Example

The only equipment needed to network the Ethernet boards together is four BNC "T" connectors, 3 lengths of 50 ohm Thin Ethernet cable (with BNC connectors at each end), and two 50 ohm BNC Ethernet terminators.

Do not use VideoNET equipment (cables, connectors, terminators) for the purpose of building a Thin Ethernet configuration.

The Thin Ethernet cable that connects the four computers together must be terminated at both ends of the segment. For this reason it is important that you do not have any open connections in your network. If you need to disconnect your computer from the network, unplug the BNC "T" connector from the AM-367. **Do not** unplug the BNC cable connectors that are attached to each side of the BNC "T" connector.

The following illustration shows the basic elements used to build a network using Thin Ethernet.

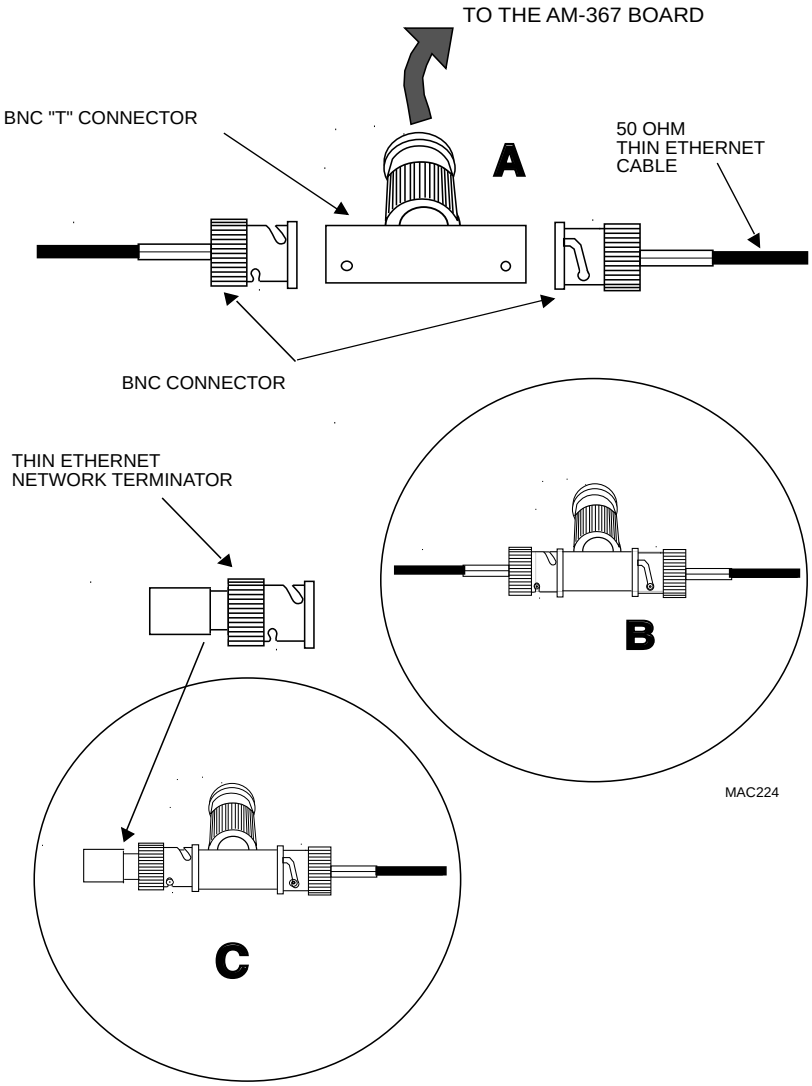

Thin Ethernet Cabling Components

When using Thin Ethernet, care should be taken to ensure the Ethernet coaxial cable is terminated correctly. Each end of the cable should have one 50 ohm terminator installed using a BNC "T" type connector.

If the cable is not terminated correctly, the on-board transceiver on the AM-362 board will go into a mode where it "thinks" it is constantly receiving data packets from the Ethernet. As a result, the computer looks like is has crashed. Correcting the cable problem will cause the computer to continue running correctly.

Problems with cable termination aren't the only things that can cause this symptom. Bad BNC connectors, loose connections, old cables, and bad "T" connectors can also cause this problem. It is worth while having spare connectors and cables on hand when installing the AM-362 board (or any Ethernet equipment), as not only the Alpha Micro but other computers connected to the network will be affected by bad cabling.

10.0 INSTALLING THE AM-368 10BASET ADAPTER

The AM-368 (used for converting Standard Ethernet protocol to 10BaseT Ethernet) is included in the PDB-00368-00 product kit. The figure below shows the AM-368 configured in its default configuration. For normal operation, the AM-368 must have its jumpers configured as shown. However, there are some optional jumper configuration settings discussed in the following Sections.

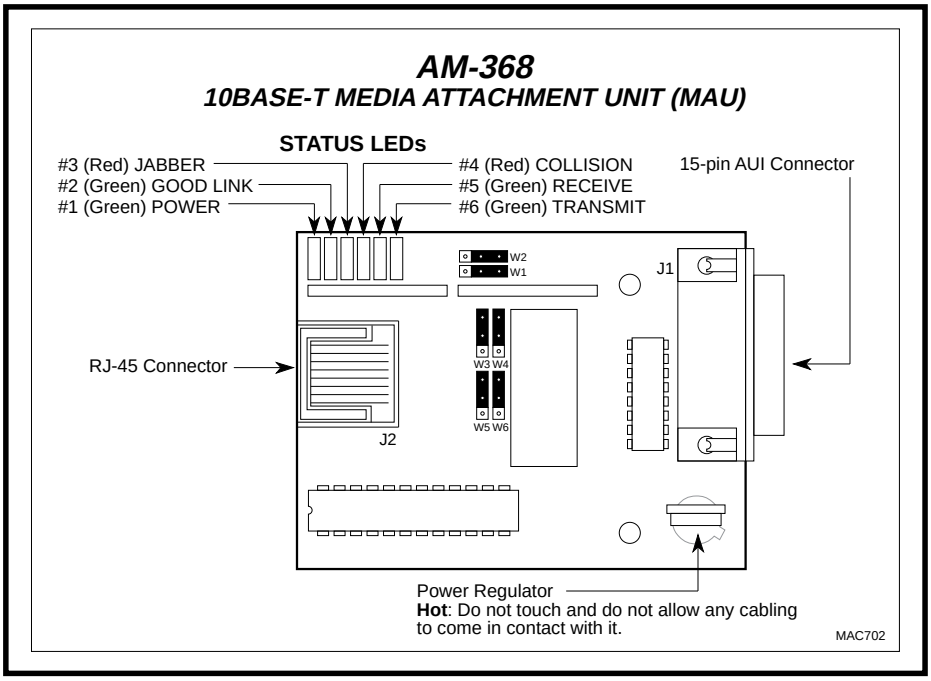

AM-368 Default Configurations

The installation is as follows:

1. The AM-368 installs inside your computer in a manner similiar to the AM-367 Thin Ethernet adapter. In the AM-1600 desktop enclosure, the AM-368 attaches to the inside of the rear panel behind the DB9 cutout, which is shown in the desktop rear panel illustration appearing earlier in this document.

2. In the Eagle and AM-1600 deskside enclosure, the AM-368 installs behind one of the 25-pin cutouts on the rear panel. Each cutout has a knockout panel that must be removed before the cutout can be used. The knockout can be easily pressed out using your finger.

3. The AM-368 has a DB15 connector at one end and an RJ45 connector at the other. To install the AM-368, insert the end of the board with the RJ45 connector behind the cutout on the rear panel. Make sure the component side of the board is facing up. Secure the AM-368 to the rear panel with the two #4 screws included in the installation kit.

4. Plug the 15-pin cable extending from the AM-366 board into the 15-pin socket on the AM-368.

Some desktop rear panels have the link connector cutout positioned close to the chassis bottom. Care must be exercised when installing the AM-368 adapter. Before installing the AM-368, unlatch the AM-314 I/O board nearest the I/O panel. Do not remove the I/O board, simply lean it toward the front panel. Attach the AM-368 to the rear panel and then carefully latch the AM-314 board back into its upright position. You may have to lift the AM-368 up slightly to clear the components on the AM-314 board. On newer computers, the cutout that supports the AM-368 has been repositioned for more clearance.

10.1 10BaseT Topology and Cabling

Ethernet networks were originally designed to be multi-point networks arranged as a bus topology. This means Ethernet works over coaxial cable (either thick or thin) with 50 ohm termination at each end of the network and each computer attaches directly to the same cable.

With the introduction of 10BaseT, Ethernet can be connected via inexpensive twisted pair cabling, normally used for telephone connection. As a result, the network topology has changed in so much as a central repeater or "hub" is required to perform the task of re-broadcasting both data and Ethernet control signals to all other computers connected to the Ethernet. Such repeaters are commonly available from commercial sources.

10BaseT connections use 100 ohm un-shielded twisted pairs, with at least two pairs per cable (one set of pairs for transmitting data and another for receiving). 10BaseT cables terminate in eight pin RJ-45 connectors with the following pin assignments:

RJ-45 pin no.	Signal Name
1	Transmit Data +
2	Transmit Data -
3	Receive Data +
6	Receive Data -

The 10BaseT specification allows a maximum distance of 100m (approx. 300 feet) between the computer and hub.

10.2 Jumper settings

The AM-368 10BaseT adapter contains a number of jumpers that allow operation of the board to be changed from the factory defaults. These jumpers are in two groups - cable operation and 10BaseT characteristics.

W3 - W6:

These four jumpers in their factory configuration allow normal operation with a 10BaseT repeater. If all four jumpers are moved to their opposite position, the RJ-45 connector on the AM-368 will be re-configured for operation as a repeater. This allows two AM-368 adapters to communicate with each other over standard 10BaseT cables without the use of a repeater when one AM-368 has standard jumper settings and the other has repeater mode settings.

When jumpers W3-W6 are in their opposite position, the RJ-45 connector pinout is as follows:

RJ-45 pin no.	Signal Name
1	Receive Data +
2	Receive Data -
3	Transmit Data +
6	Transmit Data -

W2:

This jumper has two functions. In its factory configuration, it allows the collision LED to light when a collision occurs anywhere on the Ethernet network. In the other position, the jumper disables the heartbeat test function that is part of the Ethernet specification. This jumper should only be moved from the factory position when connecting to an Ethernet I network.

W1:

This jumper has two functions. In its factory configuration, it allows the good link LED to light. In its alternate position, this jumper disables the 10BaseT link pulse transmitter and link pulse receive logic. This jumper should only be moved from the factory position when connecting to a 10BaseT network using a repeater manufactured prior to approval of the 10BaseT standard.

10.3 AM-368 Status LEDs

The AM-368 has six LEDs to indicate the status of the 10BaseT connection. These LEDs are useful when installing the AM-368 and/or 10BaseT cabling:

#1 (green) POWER:

This LED indicates the AM-368 is being powered correctly. If this LED fails to light there is either a problem with the on-board voltage regulator or +12V is not reaching the 15-pin AUI connector on the AM-368.

#2 (green) GOOD LINK:

This LED indicates that the AM-368 is receiving 10BaseT link pulses from the repeater or hub. If this LED does not light when the 10BaseT cable is connected, it indicates that there is either a cabling problem or the repeater does not match 10BaseT specifications.

#3 (red) JABBER:

This LED lights when there is a problem with the transmitter logic on the AM-368 and it is constantly transmitting data. If this LED lights permanently, the AM-368 should be removed from the network and returned for repair.

#4 (red) COLLISION:

The collision LED will blink whenever there was a collision on the Ethernet network (ie. more than one computer attempted to transmit at the same time). This LED will blink occasionally when connected to an Ethernet network. If it lights constantly there is either too much traffic on the network or more possibly another computer with a transmission problem.

#5 (green) RECEIVE:

This LED blinks whenever packets are received from the Ethernet network.

#6 (green) TRANSMIT:

This LED blinks whenever the AM-368 sends data to the Ethernet network.

11.0 ETHERNET SOFTWARE CONFIGURATION

In this section, we discuss:

- Creating a Ethernet Network Initialization File
- Modifying and testing the New System Initialization Command File

11.1 Overview of the Software Installation

- Make sure you have successfully installed the AlphaNET software, as described in the *AlphaNET Installation Guide*. The AM-366 Ethernet support software is included on your AlphaNET (2.1B or later) software release.

- There are two different drivers used for the AM-366 Ethernet board. AM366.NDV is used for AM-1600 computers and AM366B.NDV is used for Eagle 100 and 200 computers. Make sure the driver you require is located in DSK0:[1,6] on your computer.

- After copying the software onto the computer, run the NETINI program and enter the Product Installation Code (PIC). This operation is described in the *AlphaNET Installation Guide*.

- Create a network initialization file, ETHER.INI, to install your computer onto the network with a unique group and node designation. The network initialization file is also described in *AlphaNET Installation Guide*.

- Modify your system initialization command file to execute the necessary programs to bring up the Ethernet system.

11.2 Creating a Network Initialization File for Ethernet

The following is an example of how to create a network initialization file to support your Ethernet configuration. The network initialization file is set up with certain options set to accommodate your computer with unique group and node numbers as well as the correct driver for your Ethernet hardware configuration. See the *AlphaNET Installation Guide* for more detailed information on creating network initialization files.

The sample below shows a typical network initialization file for Ethernet. You must specify the correct Ethernet driver in the DRIVER statement, the correct network, group, and node numbers, and must turn NODECHECK on.

```
DRIVER = AM366              ;AM-366 Ethernet software driver
NETWORK = 1                 ;Use AM366B for Eagle computers
GROUP = 1
NODE = 3                    ; Must be unique within group
NODECOUNT = 35              ; Set > number of nodes for
                            ;   future expansion
NODECHECK = ON              ; Checks node # before request
NAME = Ether Network        ; Descriptive name
```

AM366.NDV is the Ethernet driver name used for AM-1600 computers; Eagle computers must use a driver called AM366B.NDV.

The NETWORK, GROUP, and NODE numbers define your computer's place in the network. Each type of network has its own unique network number (for example, if you have a video network and a serial network, the video network might be network 1, and the serial network number 2). On each network, the various computers connected to it are identified by the group and node numbers. Your computer might be node 3 in group 1 (as in the example above).

Using the specific data about your place in the network, use AlphaVUE to create an ETHER.INI file. Finish out of the file, and your ETHER.INI file will be ready.

11.3 Setting Up Ersatz Names

You will probably want to set up ersatz device names for the nodes on your network, as described in Chapter 1 of the *AlphaNET Installation Guide*. By using ersatz device names, you can avoid the use of lengthy and cumbersome network address numbers.

12.0 ADDITIONAL DOCUMENTATION

Besides this document, there are several other documents that will assist you in building a successful Ethernet installation.

- *AlphaNET Installation Guide*
- *AlphaNET Programmer's Manual*
- *AlphaNET User's Guide*